"EUROMODEL" HANDLE WITH THREADED HOLE

M238

+110° -20° | PA6 +GF | UL94 HB | RoHS

Material:
Reinforced polyamide.
Oils and greases resistant.

Surface:
Satin.

Colour:
Black (RAL 9011).

Central Cap:
Grey polyamide (RAL 7035 cod. 13).

Alternative Cap Colour:

Orange	(RAL 2004 cod. 02)
Blue	(RAL 5015 cod. 07)
Yellow	(RAL 1021 cod. 10)
Red	(RAL 3000 cod. 16)
Green	(RAL 6024 cod. 17)
Black	(RAL 9011 cod. 01)

Hole:
Female threaded blind hole obtained by moulding the plastic. (tolerance in not applicable).

SPECIAL REQUEST:

- It is possible to supply colours as shown in the table at pag. M-27, on request and for quantities.

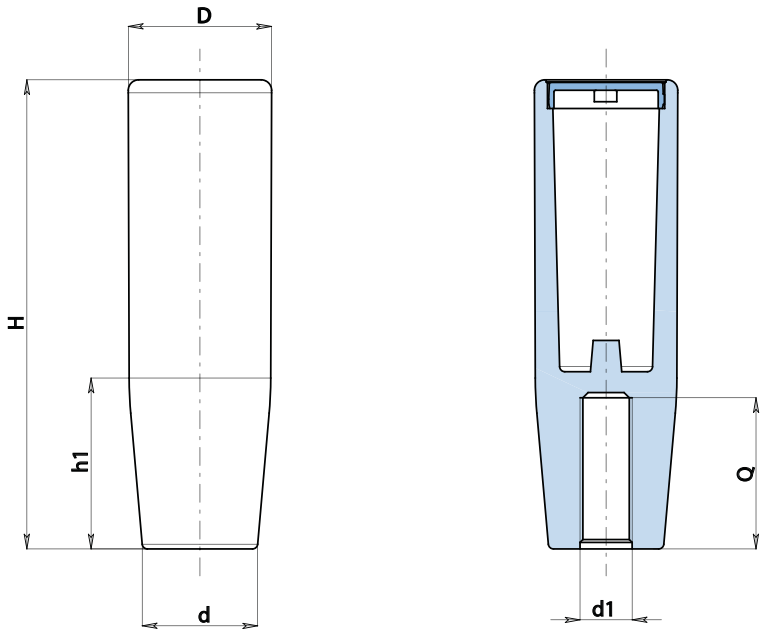

	art.	H	D	d	h1	d1	Q	g
	M23890.TM080113	89,5	27	22	32	M08	30	40
	M23890.TM100113	89,5	27	22	32	M10	30	39
	M23890.TM120113	89,5	27	22	32	M12	30	37

Availability of stock in %
( ) 90%( ) 40%( ) 5%( )

BOTECO ® - © All right reserved - www.boteco.it
Any unathorized reproduction is strictly forbidden