DIRAK
www.dirak.com

4-225 Hinge Pr01 180°

for nested door

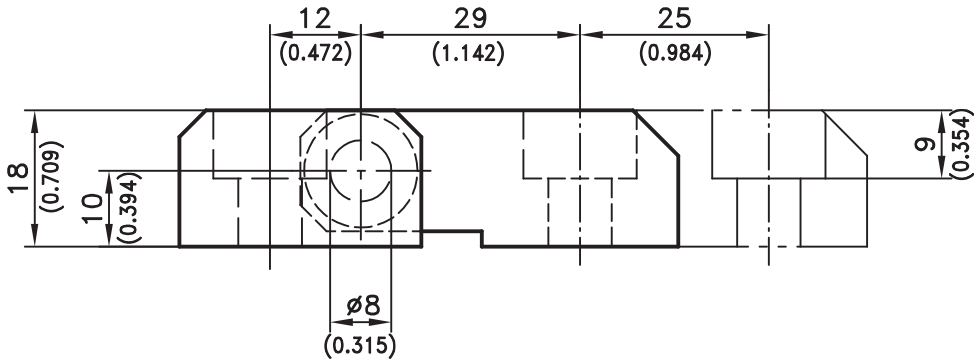

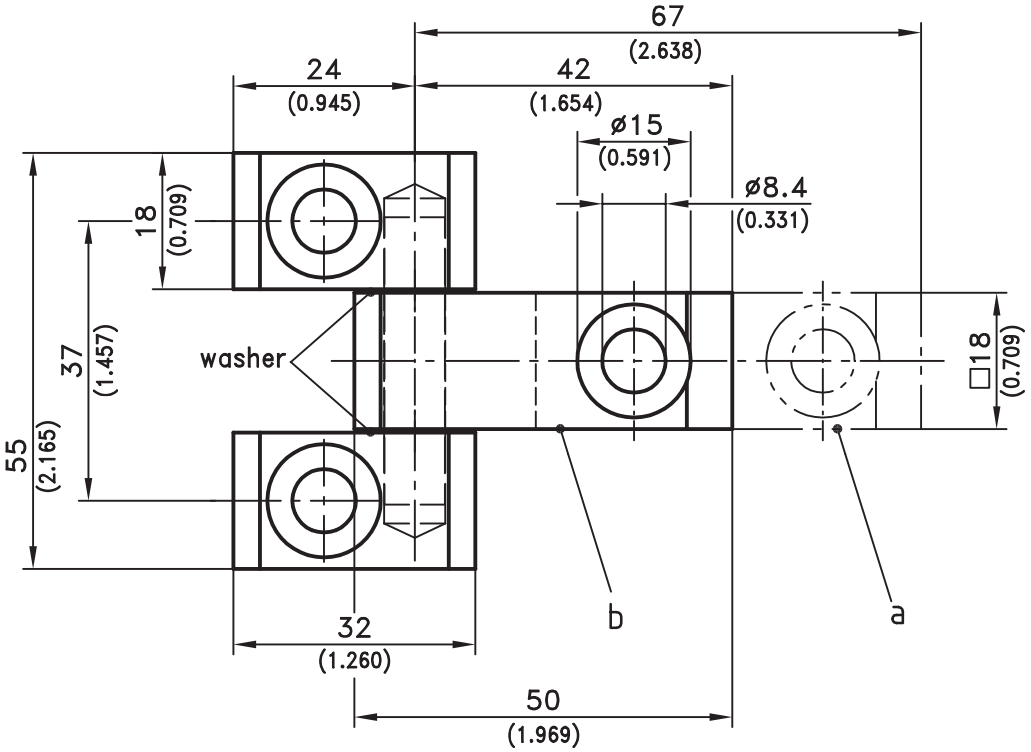

Screw-on / Weld-on Hinge, heavy duty.

Material:

a) and b)

- **Hinge parts:** steel, zinc plated

c) (not drawn)

- **Hinge-middlepart:** steel, untreated
- **Hinge-endparts:** steel, zinc plated
- **Pin and washers:** brass, nickel plated

	Part No.
a) Middle part long, with two holes Ø8.4mm / 0.331	**219-9109**
b) Middle part short, with one hole Ø8.4mm / 0.331	**219-9113**
c) Middle part short, without holes (Weld-on)	**219-9114**

DIRAK RoHS WEEE compliant

12/16/08

© copyright by DIRAK / Germany

DIRAK GmbH - Königsfelder Str. 1 - D-58256 Ennepetal - Phone: +49 (0) 2333/837-0 - Fax: +49 (0) 2333/837-100