REVOLVING HANDLE WITH STAINLESS STEEL SCREW AND NUT

M144 CIN

+135° -20° | PA6 +GF | UL94 HB | RoHS

Material:
Reinforced polyamide.
Oils and greases resistant.

Surface:
Satin.

Colour:
Black (RAL 9011).

Inserts:
(1) Stainless steel screw (AISI 304) TCCE DIN 912
(2) Stainless Steel nut (AISI 304) DIN 934.

SPECIAL REQUEST:

- It is possible to supply colours as shown in the table at pag. M-27, on request and for quantities.

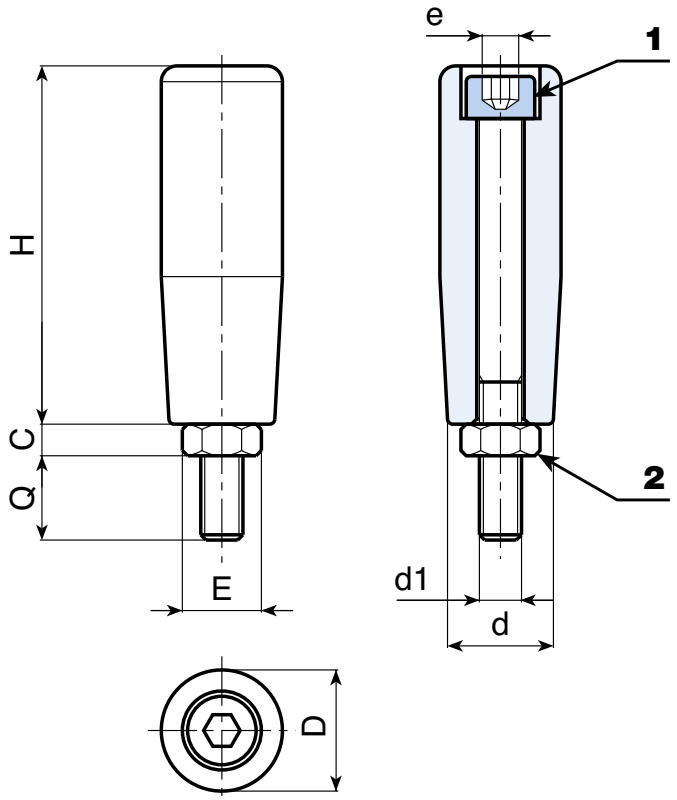

	art.	H	D	d	c	E	e	d1 6g	Q	g
☺	M14450.TM06X1001CIN	50	20	15	5	⬡ 10	⬡ 05	M06	10	30
☺	M14450.TM08X1301CIN	50	20	15	5	⬡ 10	⬡ 05	M08	13	32
☺	M14460.TM08X1501CIN	59	21	19	6	⬡ 13	⬡ 06	M08	15	56
☺	M14470.TM08X1601CIN	68	23	20	8	⬡ 17	⬡ 08	M08	16	68
☺	M14470.TM10X1601CIN	68	23	20	8	⬡ 17	⬡ 08	M10	16	92
☺	M14480.TM10X1501CIN	79	25	22	8	⬡ 17	⬡ 08	M10	15	110
☺	M14490.TM12X1701CIN	90	28	22,5	7	⬡ 19	⬡ 10	M12	17	150

Presumable presence in the stock in %
( ) 90%(☺) 40%(😐) 5%(☹)

BOTECO ® - © All right reserved - www.boteco.it
Any unathorized reproduction is strictly forbidden