P700 NEW

TEARDROP FLOOR-ANCHOR MOUNTING FOOT

Version P700: Teardrop floor-anchor mounting foot with stem type A - R12.5

	Art.	D	H	I	H1	h	A	E	s	d2	R	d1	Q	g	F1 (N)
●	**P700080.TM10X..01**	**80**	20	65	26	9	120	⬡ 13	5	9	**12,5**	**M10**	45-70-100	83-95-132	10.000
●	**P700080.TM12X..01**	**80**	20	65	26	9	120	⬡ 13	5	9	**12,5**	**M12**	45-70-100	93-110-154	10.000

Enter the selected stud length in place of the two dots . . in the item code. Customised stud length available for a minimum of 100 pieces.

Version P702: Teardrop floor-anchor mounting foot with stem type A - R15

Art.	D	H	I	H1	h	A	E	s	d2	R	d1	Q	g	F1 (N)
P702080.TM12X..01	**80**	20	65	26	9	120	⬡ 16	6,5	9	**15**	**M12**	50-70-90-110	pag.56	13.000
P702080.TM14X..01	**80**	20	65	26	9	120	⬡ 16	6,5	9	**15**	**M14**	50-70-90-110-130-150	pag.56	13.000
P702080.TM16X..01	**80**	20	65	26	9	120	⬡ 16	6,5	9	**15**	**M16**	50-70-90-110-130-150-170-190	pag.56	13.000

Enter the selected stud length in place of the two dots . . in the item code. Customised stud length available for a minimum of 100 pieces.

P

Version P704: Teardrop floor-anchor mounting foot with stem type B - R12.5

Art.	D	H	I	H1	h	A	E	s	d2	R	d1	Q	g	F1 (N)
P704080.TM16X..01	**80**	20	65	26	9	120	13	7	9	**12,5**	**M16**	50-70-90-110-130-150-170	pag.56	10.000

Enter the selected stud length in place of the two dots . . in the item code. Customised stud length available for a minimum of 100 pieces.

Version P706: Teardrop floor-anchor mounting foot with stem type B - R15

Art.	D	H	I	H1	h	A	E	s	d2	R	d1	Q	g	F1 (N)
P706080.TM20X..01	**80**	20	65	26	9	120	16	7	9	**15**	**M20**	50-70-90-110-130-150-170-190-210	pag.56	17.000
P706080.TM24X..01	**80**	20	65	26	9	120	19	7	9	**15**	**M24**	70-90-110-130-150-170-190-210	pag.56	17.000

Enter the selected stud length in place of the two dots . . in the item code. Customised stud length available for a minimum of 100 pieces.

Version P708: Teardrop floor-anchor mounting foot with stem type B - R24

Art.	D	H	I	H1	h	A	E	s	d2	R	d1	Q	g	F1 (N)
P708080.TM24X..01	**80**	20	65	32	9	120	19	10	9	**24**	**M24**	70-90-110-130-150-170	pag.57	25.000
P708080.TM30X..01	**80**	20	65	32	9	120	27	12	9	**24**	**M30**	90-110-130-150-170-190-210	pag.57	25.000

Enter the selected stud length in place of the two dots . . in the item code. Customised stud length available for a minimum of 100 pieces.

Presumable presence in the stock in %
90% ● 40% ● 5% ●

Material:
Reinforced polyamide. Resistant to oils and greases.

Surface:
Satin.

Colour:
Black (RAL 9011).

Insert:
Threaded and articulated gavanised stem.

SPECIAL REQUESTS:

- Upon request and for special quantities inserts can be supplied with customised lengths.
- Upon request and for special quantities the foot can be supplied in Orange (RAL 2004).

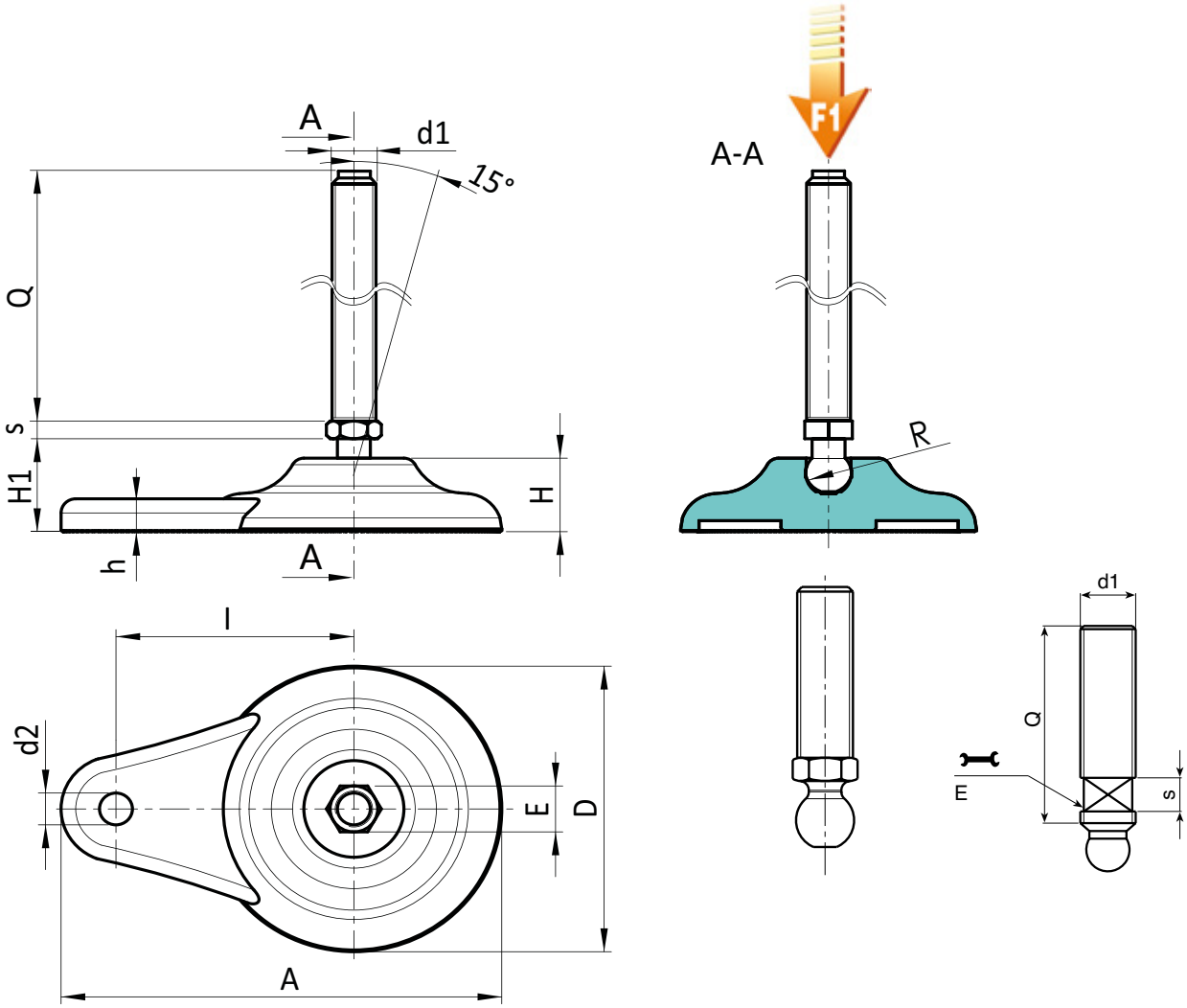

P700CIN NEW

TEARDROP FLOOR-ANCHOR MOUNTING FOOT

P702CIN - P704CIN
P706CIN - P708CIN

INOX

Version P700: Teardrop floor-anchor mounting foot with stem type A - R12.5

	Art.	D	H	I	H1	h	A	E	s	d2	R	d1	Q	g	F1 (N)
●	**P700080.TM10X..01CIN**	**80**	20	65	26	9	120	⬡ 13	5	9	**12,5**	**M10**	45-70-100	83-95-132	10.000
●	**P700080.TM12X..01CIN**	**80**	20	65	26	9	120	⬡ 13	5	9	**12,5**	**M12**	45-70-100	93-110-154	10.000

Enter the selected stud length in place of the two dots . . in the item code. Customised stud length available for a minimum of 100 pieces.

Version P702: Teardrop floor-anchor mounting foot with stem type A - R15

Art.	D	H	I	H1	h	A	E	s	d2	R	d1	Q	g	F1 (N)
P702080.TM12X..01CIN	**80**	20	65	26	9	120	⬡ 16	6,5	9	**15**	**M12**	50-70-90-110	pag.56	13.000
P702080.TM14X..01CIN	**80**	20	65	26	9	120	⬡ 16	6,5	9	**15**	**M14**	50-70-90-110-130-150	pag.56	13.000
P702080.TM16X..01CIN	**80**	20	65	26	9	120	⬡ 16	6,5	9	**15**	**M16**	50-70-90-110-130-150-170-190	pag.56	13.000

Enter the selected stud length in place of the two dots . . in the item code. Customised stud length available for a minimum of 100 pieces.

P

Version P704: Teardrop floor-anchor mounting foot with stem type B - R12.5

Art.	D	H	I	H1	h	A	E	s	d2	R	d1	Q	g	F1 (N)
P704080.TM16X..01CIN	**80**	20	65	26	9	120	13	7	9	**12,5**	**M16**	50-70-90-110-130-150-170	pag.56	10.000

Enter the selected stud length in place of the two dots . . in the item code. Customised stud length available for a minimum of 100 pieces.

Version P706: Teardrop floor-anchor mounting foot with stem type B - R15

Art.	D	H	I	H1	h	A	E	s	d2	R	d1	Q	g	F1 (N)
P706080.TM20X..01CIN	**80**	20	65	26	9	120	16	7	9	**15**	**M20**	50-70-90-110-130-150-170-190-210	pag.56	17.000
P706080.TM24X..01CIN	**80**	20	65	26	9	120	19	7	9	**15**	**M24**	70-90-110-130-150-170-190-210	pag.56	17.000

Enter the selected stud length in place of the two dots . . in the item code. Customised stud length available for a minimum of 100 pieces.

Version P708: Teardrop floor-anchor mounting foot with stem type B - R24

Art.	D	H	I	H1	h	A	E	s	d2	R	d1	Q	g	F1 (N)
P708080.TM24X..01CIN	**80**	20	65	32	9	120	19	10	9	**24**	**M24**	70-90-110-130-150-170	pag.57	25.000
P708080.TM30X..01CIN	**80**	20	65	32	9	120	27	12	9	**24**	**M30**	90-110-130-150-170-190-210	pag.57	25.000

Enter the selected stud length in place of the two dots . . in the item code. Customised stud length available for a minimum of 100 pieces.

Presumable presence in the stock in %
90% ● 40% ● 5% ●

+135° -30° | PA6 +G.F. | UL94 HB | RoHS COMPLIANT

Material:
Reinforced polyamide.
Resistant to oils and greases.

Surface:
Satin.

Colour:
Black (RAL 9011).

Insert:
Threaded and articulated gavanised stem.

Non-slip base:
Thermoplastic vulcanised rubber TPV 75 Shore
(only black RAL 9011).
Resistant to oils and greases.

SPECIAL REQUESTS:

- Upon request and for special quantities inserts can be supplied with customised lengths.
- Upon request and for special quantities the foot can be supplied in Orange (RAL 2004).
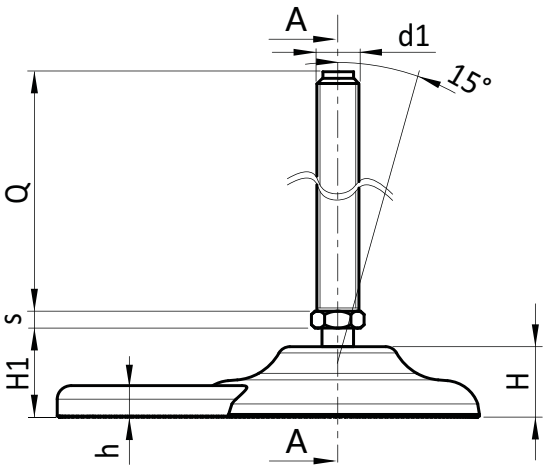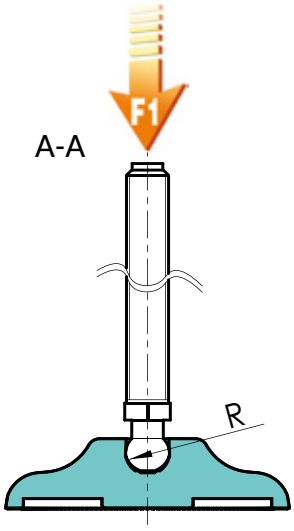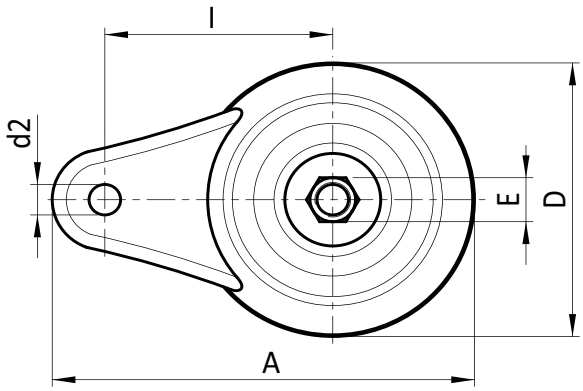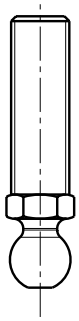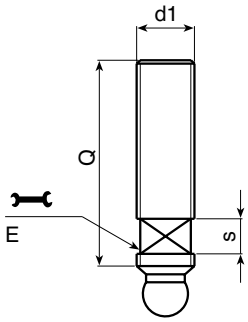
P