W815

W815CIN - W816 W816CIN

CAM THREADED PLUNGER ON STEEL / STAINLESS STEEL WITH OR WITHOUT LOCK NUT

Versions:

W815	Cam threaded plunger on black-oxyde steel.
W816	Cam threaded plunger on black-oxyde steel with lock nut.
W815 CIN	Cam threaded plunger on stainless steel.
W816 CIN	Cam threaded plunger on stainless steel with lock nut.

Materiali:

Versions W815 and W816

(1) Hardened hight resistance steel plunger pin.
(2) Plunger body turned and threaded on high grade black-oxyde steel.
(3) Die cast zamak cam lever.
(4) Black oxyde steel locking nut (UNI 5589).
(5) Zinc plated steel spring.

Versions W815 CIN and W816 CIN

(1) Stainless steel plunger pin (AISI 303).
(2) Plunger body turned and threaded on stainless steel (AISI 303).
(3) Stainless steel cam lever. (AISI 303).
(4) Stainless steel locking nut (AISI 304) (UNI 5589).
(5) Stainless steel spring.

ATTENTION: We recommend making the lodging hole for the plunger pin with tolerance H7.
ATTENTION: Nut supplied assembled (only for W816 and W816 CIN).

Surfaces:
Versions W815 and W816 : **(1,2,4)** Black-oxyde; **(3)** Epoxy-powder satin painting finish, black RAL 9011.
Versions W815CIN and W816CIN: **(1,2,4)** Natural; **(3)** Satin natural.

SPECIAL REQUESTS:
- On request and for quantities, the plunger thread can be supplied with standard pitch (not fine).
- On request the nut can be supplied separate.

To lock the plunger in the retracted position, lift the knob and rotate by 180° until it clicks into the groove.

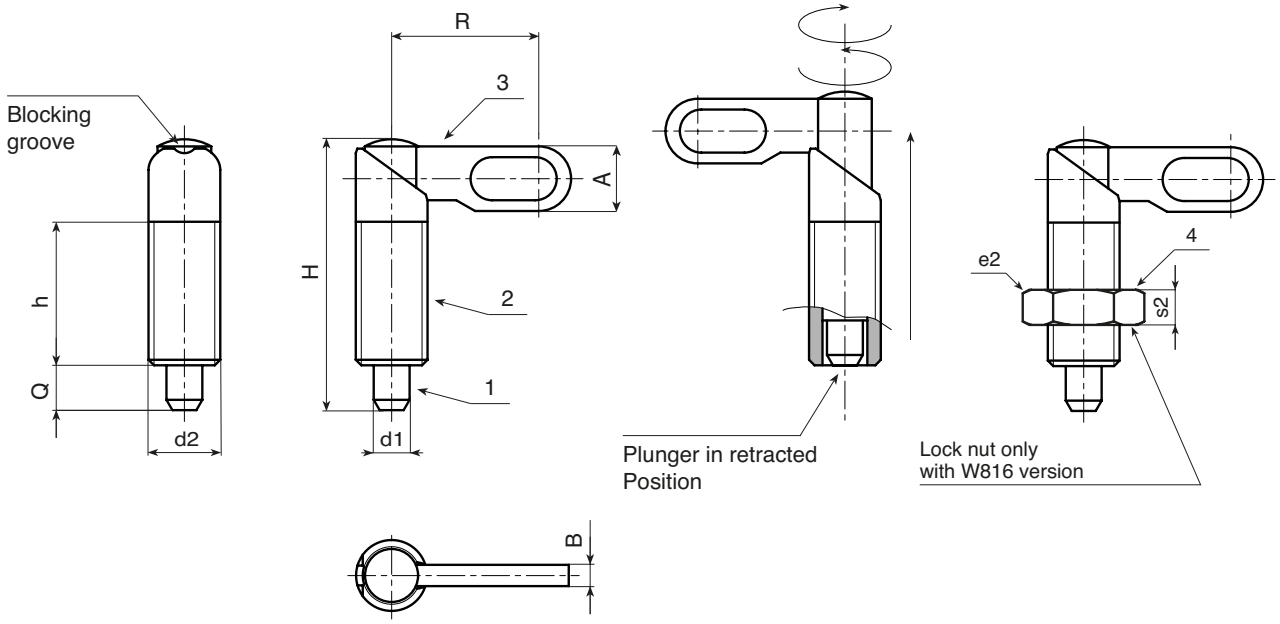

Presumable presence in the stock in %
( ) 90%( ) 40%( ) 5%( )
www.boteco.it - © All right reserved - BOTECO ®
Any unathorized reproduction is strictly forbidden

+200° -25° RoHS

Version W815 - Cam threaded plunger on black-oxyde steel

	Art.	R	H	h	A	B	d2	d1 -0,02 -0,04	Q	g
☹	W81510.V04	25	38	20	9	3	M10x1	4	6	18
☺	W81510.V05	25	38	20	9	3	M10x1	5	6	19
☹	W81510.V06	25	38	20	9	3	M10x1	6	6	21
☹	W81512.V05	30	46	25	11	3,5	M12X1,5	5	8	30
☺	W81512.V06	30	46	25	11	3,5	M12X1,5	6	8	30
☹	W81512.V08	30	46	25	11	3,5	M12X1,5	8	8	33
☹	W81516.V06	40	60	32	14	5	M16x1,5	6	10	73
☺	W81516.V08	40	60	32	14	5	M16x1,5	8	10	75
☹	W81516.V10	40	60	32	14	5	M16x1,5	10	10	77
☹	W81520.V08	50	70	35	18	6	M20x1,5	08	12	137
☺	W81520.V10	50	70	35	18	6	M20x1,5	10	12	142
☹	W81520.V12	50	70	35	18	6	M20x1,5	12	12	143

Version W816 - Cam threaded plunger on black-oxyde steel with lock nut

	Art.	R	H	h	A	B	d2	e2	s2	d1	Q	g
☹	W81610.V04	25	38	20	9	3	M10x1	17	6	4	6	25
☺	W81610.V05	25	38	20	9	3	M10x1	17	6	5	6	26
☹	W81610.V06	25	38	20	9	3	M10x1	17	6	6	6	28
☹	W81612.V05	30	46	25	11	3,5	M12X1,5	19	7	5	8	40
☺	W81612.V06	30	46	25	11	3,5	M12X1,5	19	7	6	8	40
☹	W81612.V08	30	46	25	11	3,5	M12X1,5	19	7	8	8	43
☹	W81616.V06	40	60	32	14	5	M16x1,5	24	8	6	10	91
☺	W81616.V08	40	60	32	14	5	M16x1,5	24	8	8	10	93
☹	W81616.V10	40	60	32	14	5	M16x1,5	24	8	10	10	95
☹	W81620.V08	50	70	35	18	6	M20x1,5	30	9	08	12	168
☺	W81520.V10	50	70	35	18	6	M20x1,5	30	9	10	12	173
☹	W81620.V12	50	70	35	18	6	M20x1,5	30	9	12	12	174

Version W815 CIN - Cam threaded plunger on stainless steel

INOX

	Art.	R	H	h	A	B	d2	d1	Q	g
☹	W81510.I04CIN	25	38	20	9	3	M10x1	4	6	18
☹	W81510.I05CIN	25	38	20	9	3	M10x1	5	6	19
☹	W81510.I06CIN	25	38	20	9	3	M10x1	6	6	21
☹	W81512.I05CIN	30	46	25	11	3,5	M12X1,5	5	8	30
☹	W81512.I06CIN	30	46	25	11	3,5	M12X1,5	6	8	30
☹	W81512.I08CIN	30	46	25	11	3,5	M12X1,5	8	8	33
☹	W81516.I06CIN	40	60	32	14	5	M16x1,5	6	10	73
☹	W81516.I08CIN	40	60	32	14	5	M16x1,5	8	10	75
☹	W81516.I10CIN	40	60	32	14	5	M16x1,5	10	10	77
☹	W81520.I08CIN	50	70	35	18	6	M20x1,5	08	12	137
☹	W81520.I10CIN	50	70	35	18	6	M20x1,5	10	12	142
☹	W81520.I12CIN	50	70	35	18	6	M20x1,5	12	12	143

Version W816 CIN - Cam threaded plunger on stainless steel with lock nut

INOX

	Art.	R	H	h	A	B	d2	e2	s2	d1	Q	g
☹	W81610.I04CIN	25	38	20	9	3	M10x1	17	6	4	6	25
☹	W81610.I05CIN	25	38	20	9	3	M10x1	17	6	5	6	26
☹	W81610.I06CIN	25	38	20	9	3	M10x1	17	6	6	6	28
☹	W81612.I05CIN	30	46	25	11	3,5	M12X1,5	19	7	5	8	40
☹	W81612.I06CIN	30	46	25	11	3,5	M12X1,5	19	7	6	8	40
☹	W81612.I08CIN	30	46	25	11	3,5	M12X1,5	19	7	8	8	43
☹	W81616.I06CIN	40	60	32	14	5	M16x1,5	24	8	6	10	91
☹	W81616.I08CIN	40	60	32	14	5	M16x1,5	24	8	8	10	93
☹	W81616.I10CIN	40	60	32	14	5	M16x1,5	24	8	10	10	95
☹	W81620.I08CIN	50	70	35	18	6	M20x1,5	30	9	08	12	168
☹	W81620.I10CIN	50	70	35	18	6	M20x1,5	30	9	10	12	173
☹	W81620.I12CIN	50	70	35	18	6	M20x1,5	30	9	12	12	174

Presumable presence in the stock in %

( ) 90%(☺) 40%(😐) 5%(☹)

BOTECO ® - © All right reserved - www.boteco.it
Any unathorized reproduction is strictly forbidden