DIRAK
www.dirak.com

4-135 Concealed Hinge Pr03 120°

Door bending 23mm for surface mounted door

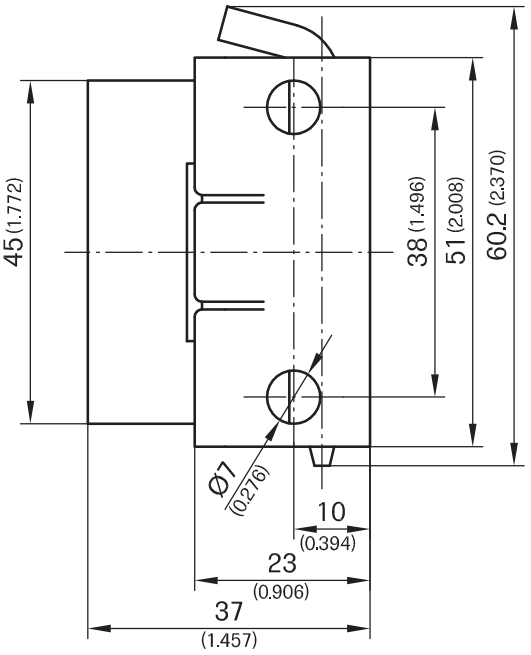

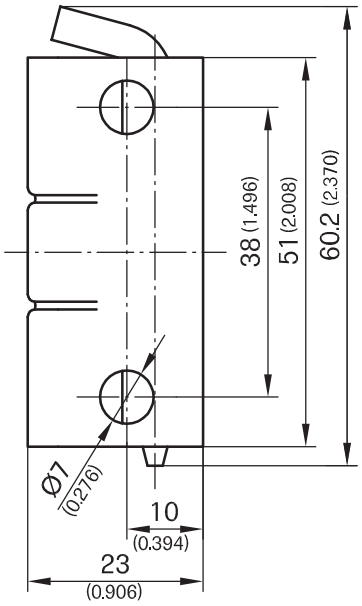

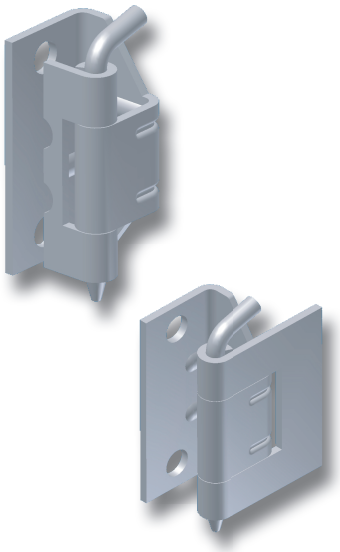

Exemple of use turned by 180°

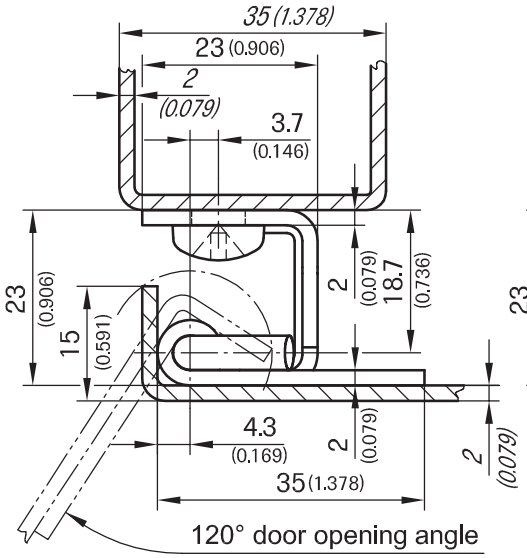

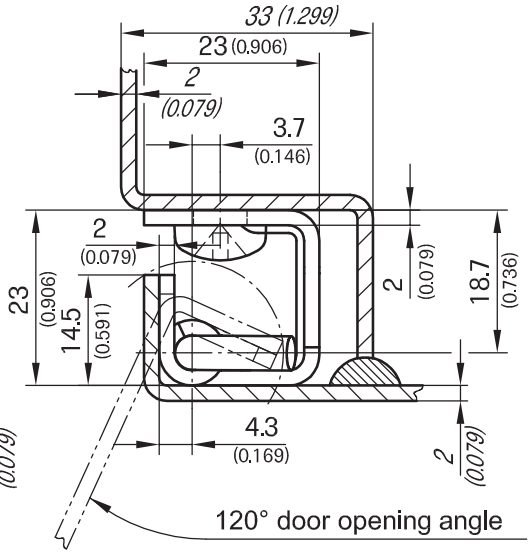

Hinge for surface mounted doors.

- Concealed
- Opening angle 120°
- Two different fastenings on the door:
  1. Door part to be weld-on on the door leaf.
  2. Door part to be weld-on on the door bending.
- RH and LH application.
- Frame part: screw-on e.g.: Cross recessed raised cheese head screw M6 DIN-EN-ISO 7045

Material:

- **Door part:** steel, untreated
- **Frame part:** steel, zinc plated
- **Pin:** steel, zinc plated

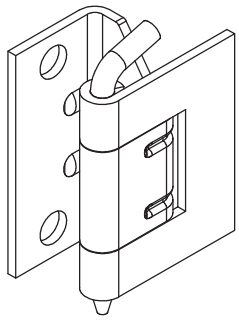

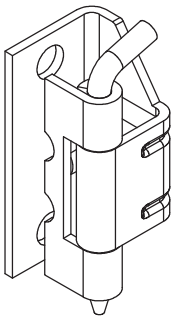

Hinge	**216-9008**

Hinge	**216-9013**

12/16/08

© copyright by DIRAK / Germany

DIRAK GmbH - Königsfelder Str. 1 - D-58256 Ennepetal - Phone: +49 (0) 2333/837-0 - Fax: +49 (0) 2333/837-100