4-181 Hinge Pr05 180°

Lift-off, for adjacent cabinets, door bending 25mm, for surface mounted door

180° Hinge for heavy duty applications.
- RH or LH application.
- Advantages:
- The door can be lifted-off by loosening the screw of the lower (bottom) part, which then can be slid downwards.
- Horizontal adjusting feature by sliding adjusting bushings.
- Door with notch (as drawn) can be applied RH and LH.

Material:
- **Frame-part and door-part:** zinc die, black coated
- **Pin:** steel, zinc plated
- **Washer:** brass, nickel plated

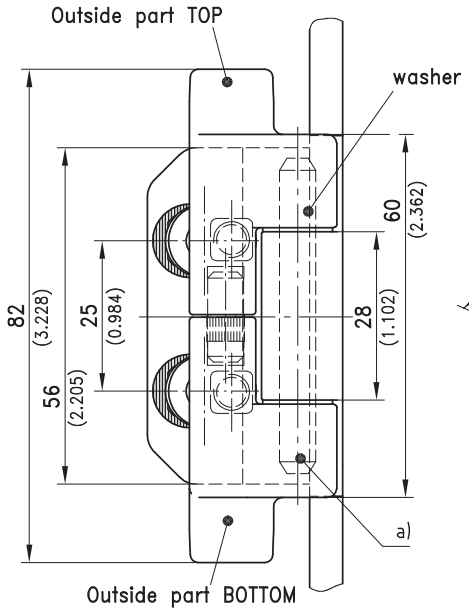

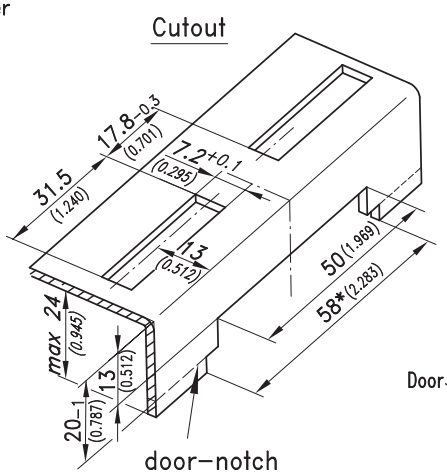

door–notch

*Only notch in case you prefer a narrow gap (1–2mm) between door and frame.

Examples of applications

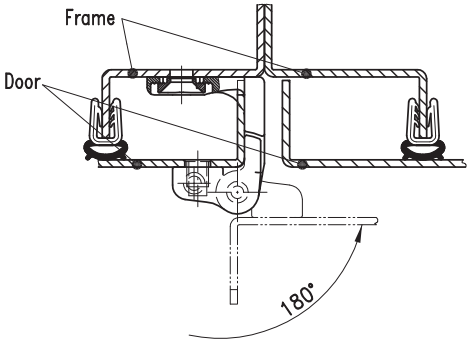

180° if hinges are installed on the left OR on the right.

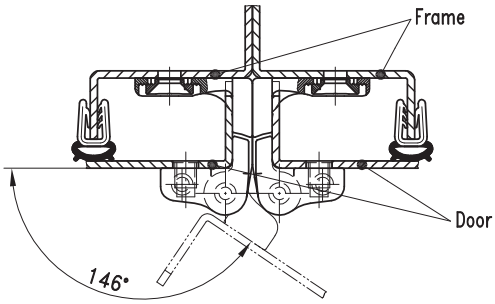

146° if hinges are installed on the left AND on the right.

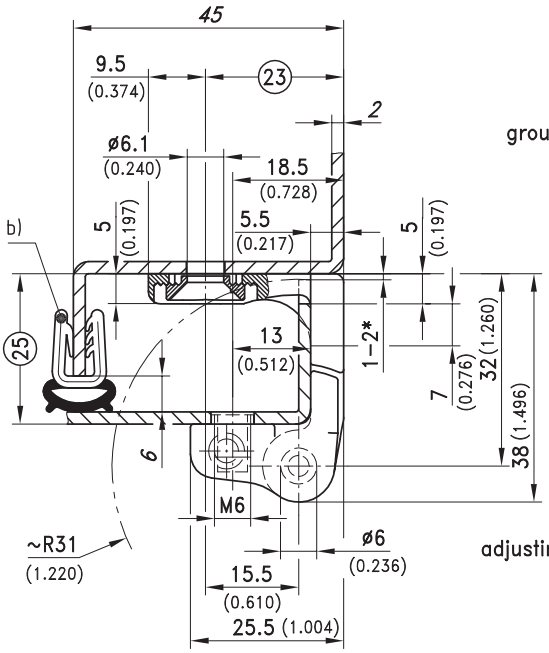

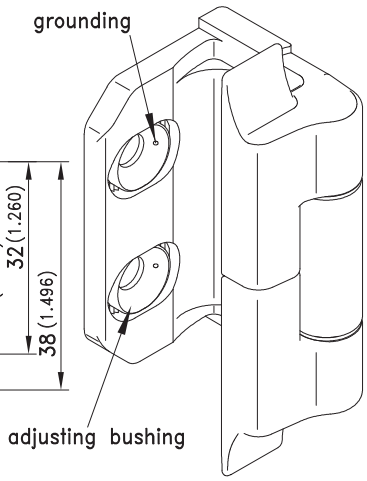

	Part No.	see page
a) Hinge	212-9308	
b) e.g. Clip-on profile	209-0201	07.19

DIRAK GmbH Königsfelder Str. 1 58256 Ennepetal
Tel.: 02333.837-0 Fax: 02333.837-100 www.dirak.com

06.02.2012
© copyright by DIRAK / Germany